

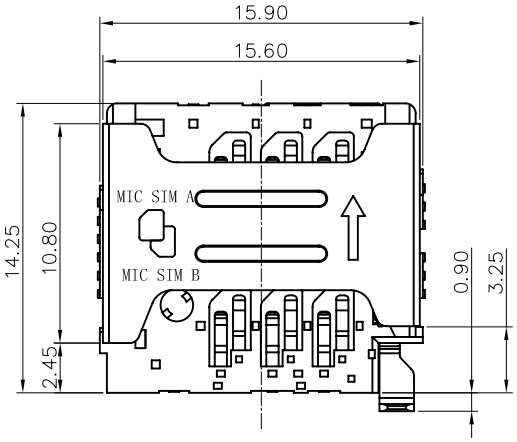

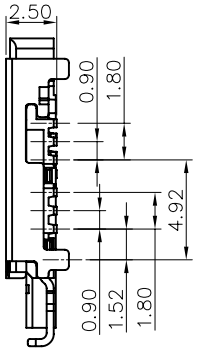

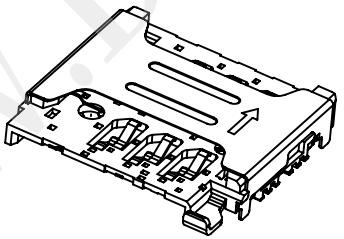

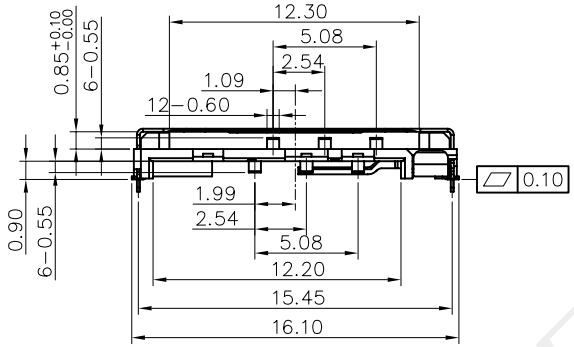

PIN No	DESCRIPTION
P1-A/B	VCC : SUPPLY VOLTAGE
P2-A/B	RST : RESET SIGNAL
P3-A/B	CLK : CLOCK SIGNAL
P5-A/B	GND
P6-A/B	VPP : VARIABLE SUPPLY VOLTAGE
P7-A/B	I/O : SERIAL DATA INPUT/OUTPUT

NOTES:
1. MATERIAL:
   1.1 Housing: High Temperature Thermoplastic UL94V-0; Color:Black.
   1.2 Terminal: Copper Alloy, T=0.15mm.
   1.3 Shell: Stainless Steel, T=0.15mm
   1.4 Drawbar: Stainless Steel, T=0.30mm
2. FINISH:
   2.1 Terminal: Plated Gold on the Contact Area and Solder Tails, Underplated Nickel Over all.
   2.2 Shell: Plated Gold on the Solder Tails, Underplated Nickel Over all.
3. SPECIALITY:
   3.1 Rated current: 0.5A
   3.2 Rated voltage: 30V
   3.3 Contact Resistance: 50mΩ MAX
   3.4 Insulation Resistance: 100MΩ MIN 100V DC
   3.5 Dielectric withstanding voltage: 100V AC.
   3.6 Solder ability: 245±5℃, 5±0.5s.
   3.7 Durability: 5000 Cycles Min.

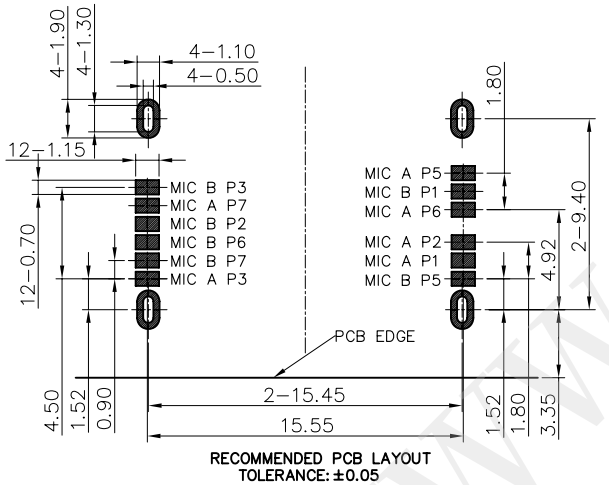

RECOMMENDED PCB LAYOUT
TOLERANCE: ±0.05

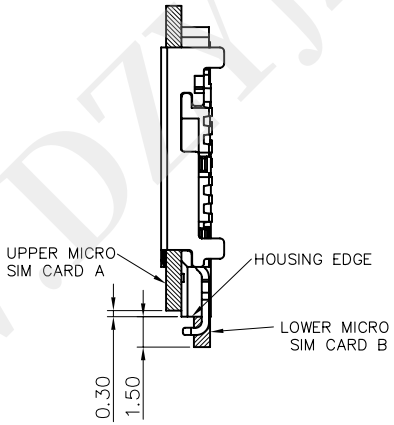

深圳市华宇创精密电子有限公司

TOLERANCE: X.X ±0.30, X.XX ±0.25, X.XXX ±0.15, X.° ±2°, X.X° ±0.5°	DRAWED BY: 陈一鸣	DATE: 2014-02-23	PART NAME: 2.5H DOUBLE MICRO SIM CARD
	CHECKED BY: 马跃	DATE: 2014-02-23	PART NO. HYC50-2IN112-250
UNIT: mm [inch]	APPROVED BY: 柯南	DATE: 2014-02-23	MOLD NO.
SCALE:1:1 SIZE: A4			DRAW NO: HYC-1909051145
			SHEET NO. 1 OF 1

WWW.DZYJZJ.COM